Twiflex Limited

DS2500

MX13, 25, 30 and 40 Disc Brake Caliper

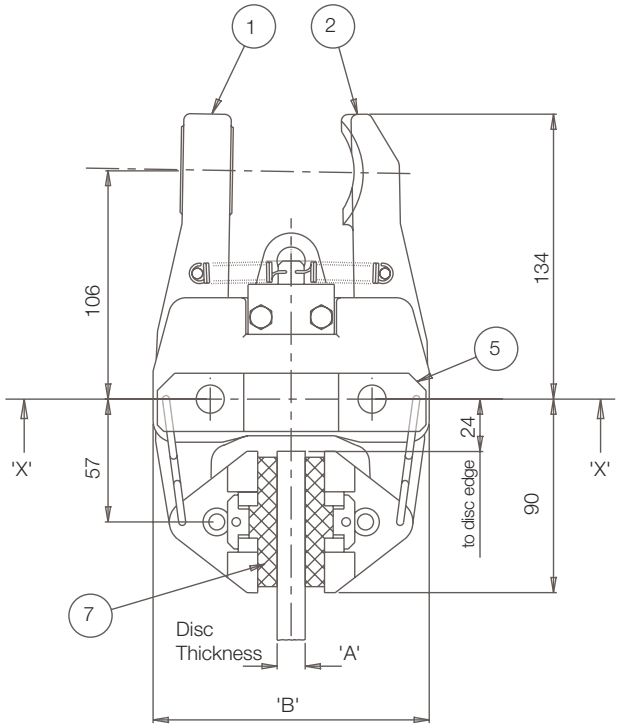

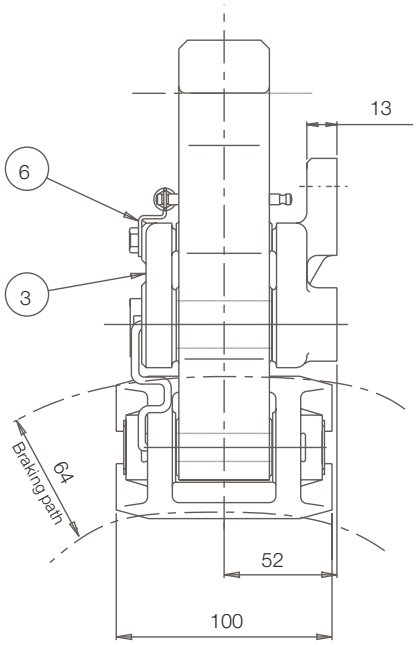

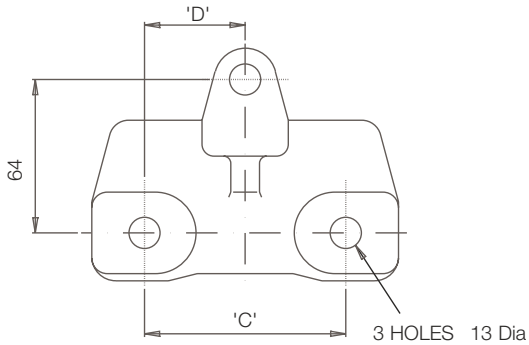

VIEW ON CALIPER BASE

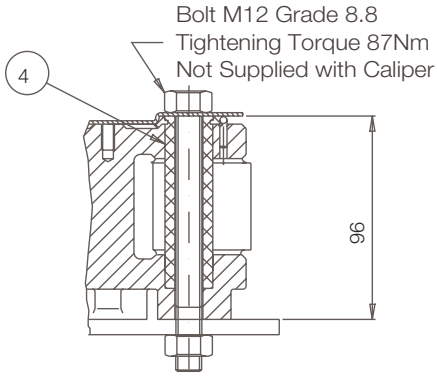

PART SECTION 'X-X'

		Dimensions in mm			
Caliper	**Part No.**	**A**	**B**	**C**	**D**
MX13	6780685	12.7	130	75	37.5
MX25	6780710	25.4	134	84	42
MX30	6780711	30	142	75	37.5
MX40	6780712	40	150	84	42

Weight of caliper	-7.0kg
Total pad area	-104cm^2 (2pads)
Pad dimensions new	-60 x 90 x 13mm thick
Pad material	-Asbestos-free high friction material
Allowable pad wear	-8mm per pad

The standard MX series brake caliper, is supplied as a right-hand assembly. (as shown above) Left-hand assembly can be supplied on request, or can easily be changed on site.

Twiflex Disc Brakes must be used with Twiflex asbestos free brake pads. The use of any other brake pads will invalidate the warranty. Twiflex Limted reserves the right to modify or change the design without prior notice.

MX13, 25, 30 and 40 Disc Brake Caliper

General Description

The Twiflex MX13, MX25, MX30 & MX40 disc brake calipers are used with brake discs of 12.7, 25.4, 30 & 40mm thickness respectively. They may be used with any of the series of actuators listed below.
Normally one or two units will be used per disc but the number may be increased, depending on disc size

Thruster	Description	Data Sheet	Maximum Braking Force
A	Pneumatically applied spring released	2501	6.9
B	Pneumatically applied spring released	2502	11
D	Pneumatically applied spring released	2503	3.6
E	Pneumatically applied spring released	2504	0.74
G	Pneumatically applied spring released	2505	1.9
H	Mechanically applied hand operated	2506	8.3
K	Spring applied pneumatically released	2507	2.15, 4.3 and 6.4
L	Spring applied pneumatically released	2508	2.15, 4.3 and 6.4
XS	Spring applied pneumatically released	2509	6.8, 11.2 and 14.3
XSH	Spring applied hyraulically released	2510	6.8, 11.2 and 14.3
W	Mechanically applied hand operated	2511	2.68
EMX	Spring applied electrically released	2512	6.1

The brake units can be positioned at any angle around the periphery of the disc, but ideally they should be mounted horizontally (in 3 or 9 o'clock positions) in relation to the disc.
If a caliper is mounted at an angle of more than about 10 deg. from the horizontal it should be fitted with an inclined mounting kit or equalising link. This applies also to calipers used on vertical shaft installations.

Discs:

A range of standard discs of 12.7mm and 25.4mm thickness are available from Twiflex see Data Sheet DS5002. Minimum disc diameter for the MX caliper is 300mm

Controllers:

Standard Twiflex Controllers are available for single or multi-caliper installations for use with electric, pneumatic and hydraulic signalling systems.

Pad replacement in air applied calipers:

To replace the pads, secure the installation to ensure safety.
Straighten tabs at each end of the brake pads, and remove worn pads. Clean disc and the pad recesses in the shoes with a suitable cleaning agent such as white spirit. Fit new pads, and bend tabs through 90 deg. so as to hold pads in position, the pad should be free to move sideways.

Pad replacement in spring applied calipers:

To replace the pads, secure the installation to ensure safety.
Slacken the two locknuts holding the thruster, and screw back the push rod to create space between pad and disc.
Straighten tabs at each end of the brake pads, and remove worn pads. Clean disc and the pad recesses in the shoes with a suitable cleaning agent such as white spirit. Fit new pads, and bend tabs through 90 deg. so as to hold pads in position, the pad should be free to move sideways.
Refit the thruster as described in the relevant data sheet

Available Spares					
Caliper		MX13	MX25	MX30	MX40
Item	Component	Part No.	Part No.	Part No.	Part No.
1	Arm Assembly -Thruster	6630145	6630145	6630149	6630149
2	Arm Assembly -Slotted	6630146	6630145	6630150	6630150
3	Caliper Base	8030025	8030026	8030025	8030026
4	Pivot Pin	7952383	7952383	7952383	7952383
5	Retaining Plate	7951480	7951480	7951480	7951480
6	Spring Anchor Plate	7951501	7951501	7951501	7951501
7	Pad Assembly (2 Pads)	7080118-Z-SS2	7080118-Z-SS2	7080118-Z-SS2	7080118-Z-SS2
	Spring Kit	7902813	7902813	7902813	7902813
	Inclined Mounting Kit	7901512	7901512	7901512	7901512

For bedding-in and conditioning procedures see publication M1060
Health and Safety data sheet reference to DS 0500

Twiflex® Limited
An Altra Industrial Motion Company

www.twiflex.com

9 Briar Road, Twickenham
Middlesex TW2 6RB - England
+44 (0) 20 8894 1161
Fax: +44 (0) 20 8755 5601

This approval is in Accordance with Certificate number 850822
Issue 04 June 2009

Twiflex Limited

DS2501

MXA Disc Brake Caliper - Pneumatically Applied, Spring Released

Nominal Dimensions given

For caliper dimensions see DS2500

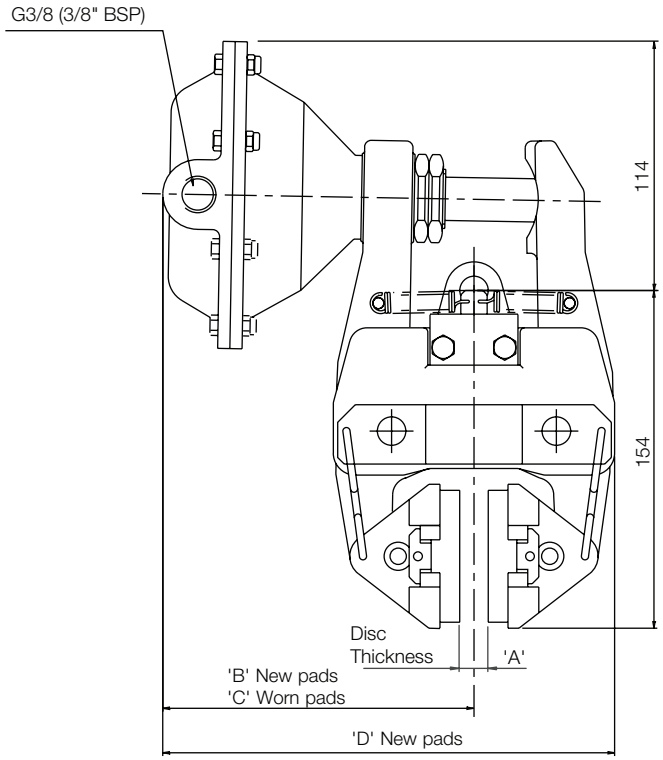

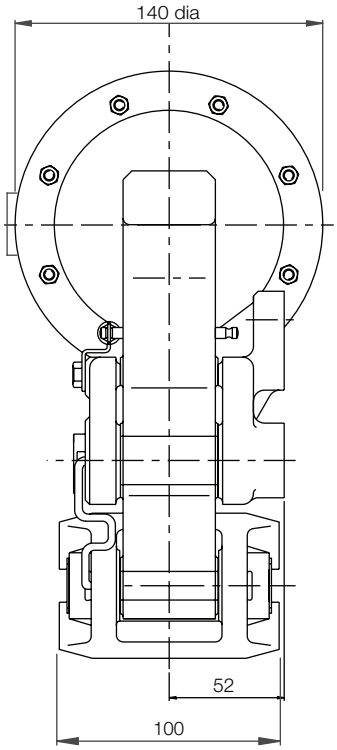

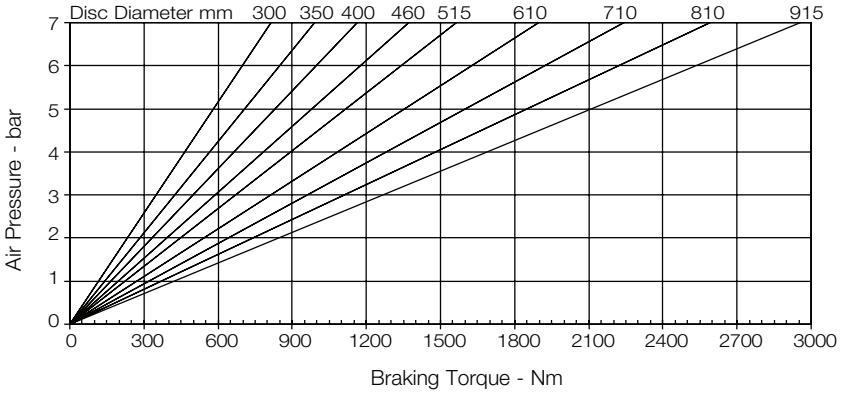

	Dimensions in mm			
Caliper	**'A'**	**'B'**	**'C'**	**'D'**
MXA 13	12.7	142	150	207
MXA 25	25.4	148	156	215
MXA 30	30	142	150	213
MXA 40	40	148	156	223

Weight (caliper and thruster) - 8.32kg
(thruster only) - 1.32kg

Volume displacement of thruster at full stroke is 300ml.

Maximum pressure 7 bar

Maximum Braking Force - 6.9kN @ 7 bar

The ratings shown on the above graph are based on fully bedded and conditioned brake pads with nominal friction coefficient μ=0.4.

For bedding-in and conditioning procedures see Publication M1060.

Braking Force is defined as the Tangential Force acting on the brake disc at the Effective Disc Radius.
Braking Torque (Nm) = Braking Force (N) x Effective Disc Radius (m) where Effective Disc Radius = Actual Disc Radius - 0.033.

Twiflex Disc Brakes must be used with Twiflex asbestos free brake pads. The use of any other brake pads will invalidate the warranty. Twiflex Limted reserves the right to modify or change the design without prior notice.

MXA Disc Brake Caliper - Pneumatically Applied, Spring Released

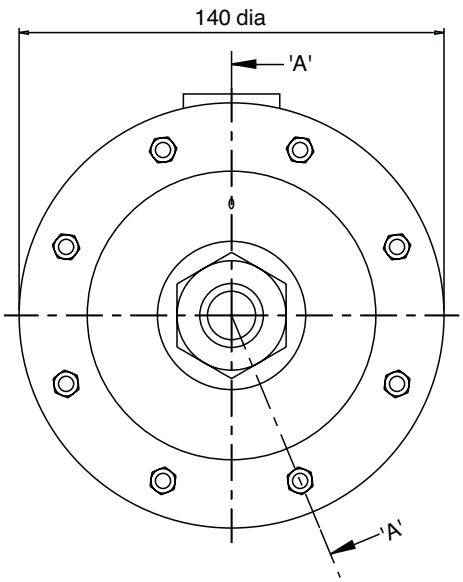

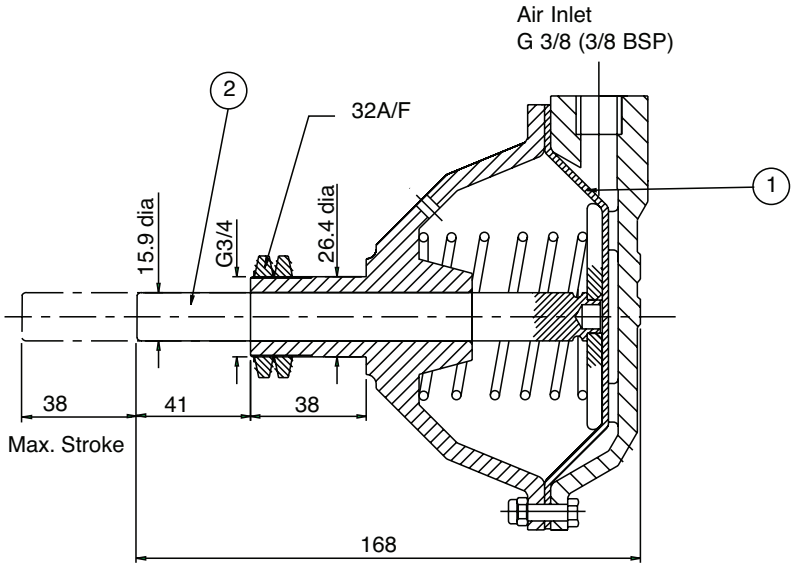

Section 'A'-'A'

This range of pneumatically operated brakes uses dry and filtered compressed air at pressures up ot 7 bar. Pneumatic brakes require a control valve which may be operated either manually, or by pneumatic or electrical signal.

Should it become necessary to replace a diaphragm, ensure air supply is disconnected, remove the M5 botls and the rear cap of the thruster. Remove the worn diaphragm; clean-up the contacting surfaces and re-assemble with the new diaphragm and botls in position. (Tightening Torque 5.7Nm)

Thruster Part Number 7200056

Available Spares		
Item	**Component**	**Part No.**
1	Diaphragm Kit	7902801
2	Piston Rod Assembly	7200493

Thruster Fitment

1. Offer thruster to caliper making sure that both lock nuts are removed before placing push rod through caliper arm.

2. Fit lock nuts over the push rod and locate it's end within the slot of the other arm.

3. Tighten one lock nut to 50-60 Nm then tighten the second nut against the first.

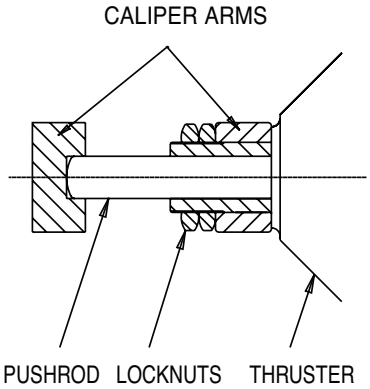

Twiflex® Limited
An Altra Industrial Motion Company

www.twiflex.com

9 Briar Road, Twickenham
Middlesex TW2 6RB - England
+44 (0) 20 8894 1161
Fax: +44 (0) 20 8755 5601

This approval is in Accordance with Certificate number 850822
Issue 04 June 2009 © Twiflex 2001.

DS2501 11/11 Printed in USA

Twiflex Limited

DS2502

MXB Disc Brake Caliper - Pneumatically Applied, Spring Released

Nominal Dimensions given

For caliper dimensions see DS2500

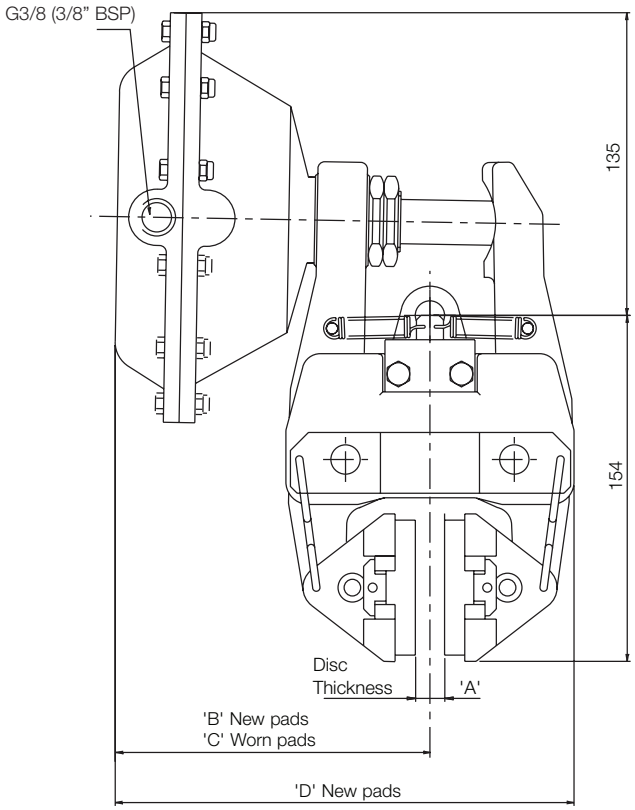

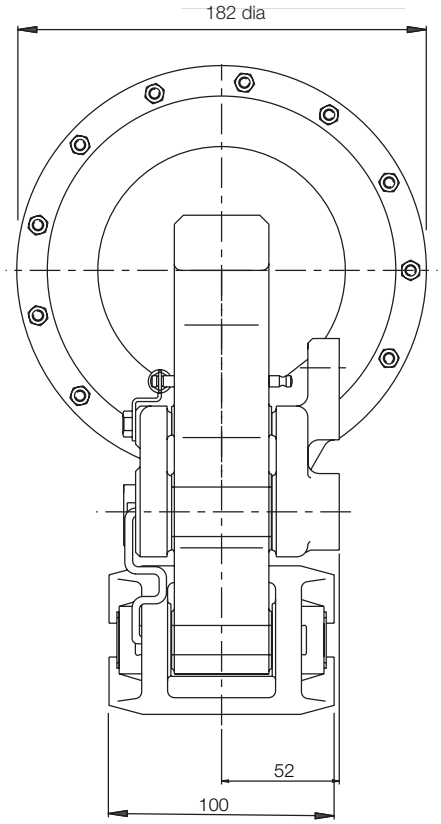

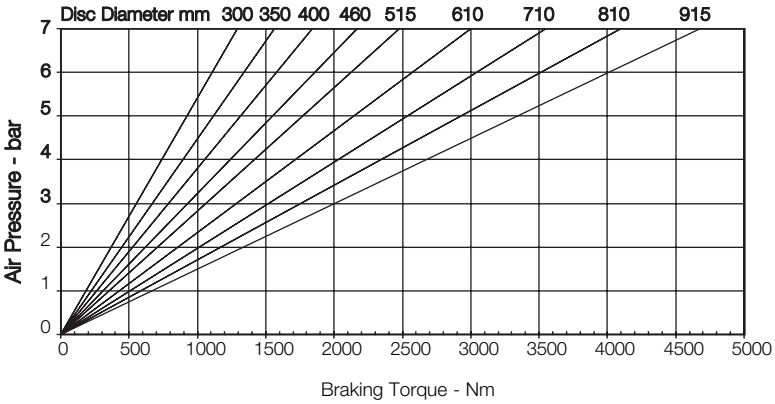

	Dimensions in mm			
Caliper	**'A'**	**'B'**	**'C'**	**'D'**
MXB 13	12.7	142	150	207
MXB 25	25.4	148	156	215
MXB 30	30	142	150	213
MXB 40	40	148	156	223

Weight (caliper and thruster) - 9.06kg
(thruster only) - 2.06kg

Volume displacement of thruster at full stroke is 426ml.

Maximum pressure 7 bar

Maximum Braking Force - 11kN @ 7 bar

The ratings shown on the above graph are based on fully bedded and conditioned brake pads with nominal friction coefficient μ=0.4.

For bedding-in and conditioning procedures see Publication M1060.

Braking Force is defined as the Tangential Force acting on the brake disc at the Effective Disc Radius.
Braking Torque (Nm) = Braking Force (N) x Effective Disc Radius (m) where Effective Disc Radius = Actual Disc Radius - 0.033.

Twiflex Disc Brakes must be used with Twiflex asbestos free brake pads. The use of any other brake pads will invalidate the warranty. Twiflex Limted reserves the right to modify or change the design without prior notice.

MXB Disc Brake Caliper - Pneumatically Applied, Spring Released

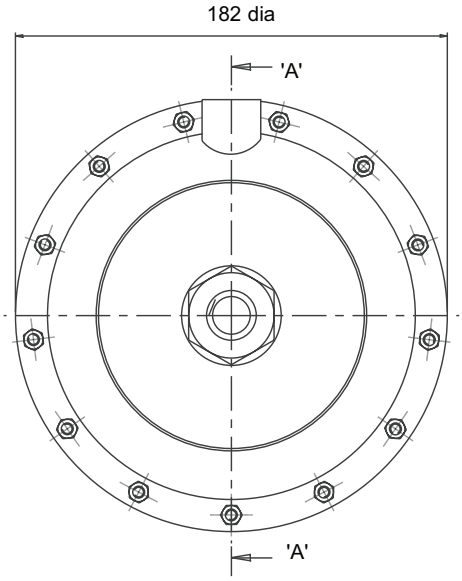

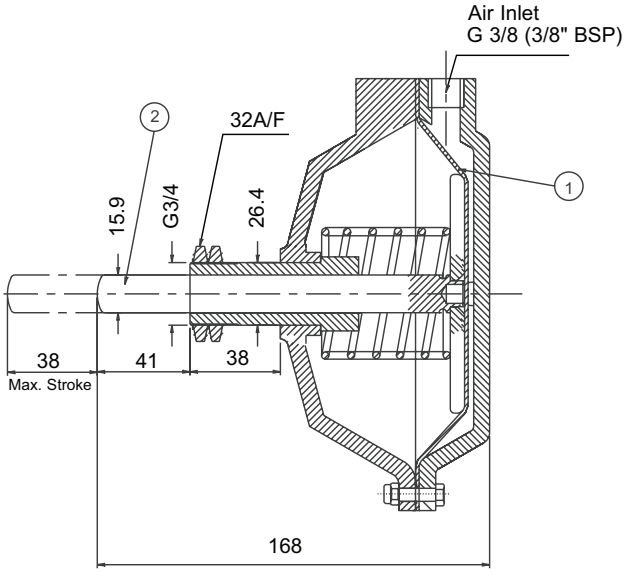

Section 'A ' - 'A'

This range of pneumatically operated brakes uses dry and filtered compressed air at pressures up ot 7 bar. Pneumatic brakes require a control valve which may be operated either manually, or by pneumatic or electrical signal.

Should it become necessary to replace a diaphragm, ensure air supply is disconnected, remove the M5 botls and the rear cap of the thruster. Remove the worn diaphragm; clean-up the contacting surfaces and re-assemble with the new diaphragm and botls in position. (Tightening Torque 5.7Nm)

Thruster Part Number 7200829

Available Spares		
Item	**Component**	**Part No.**
1	Diaphragm Kit	7902803
2	Piston Rod Assembly	7200803

Thruster Fitment

1. Offer thruster to caliper making sure that both lock nuts are removed before placing push rod through caliper arm.

2. Fit lock nuts over the push rod and locate it's end within the slot of the other arm.

3. Tighten one lock nut to 50-60 Nm then tighten the second nut against the first.

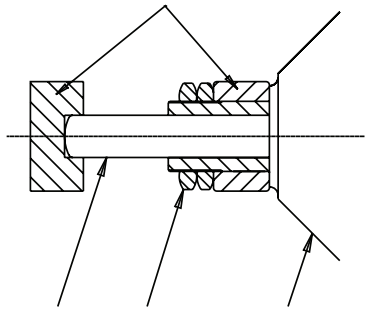

Twiflex® Limited
An Altra Industrial Motion Company

www.twiflex.com

9 Briar Road, Twickenham
Middlesex TW2 6RB - England
+44 (0) 20 8894 1161
Fax: +44 (0) 20 8755 5601

This approval is in Accordance with Certificate number 850822
Issue 04 June 2009

Twiflex Limited

DS2503

MXD Disc Brake Caliper - Pneumatically Applied, Spring Released

Nominal Dimensions given

For caliper dimensions see DS2500

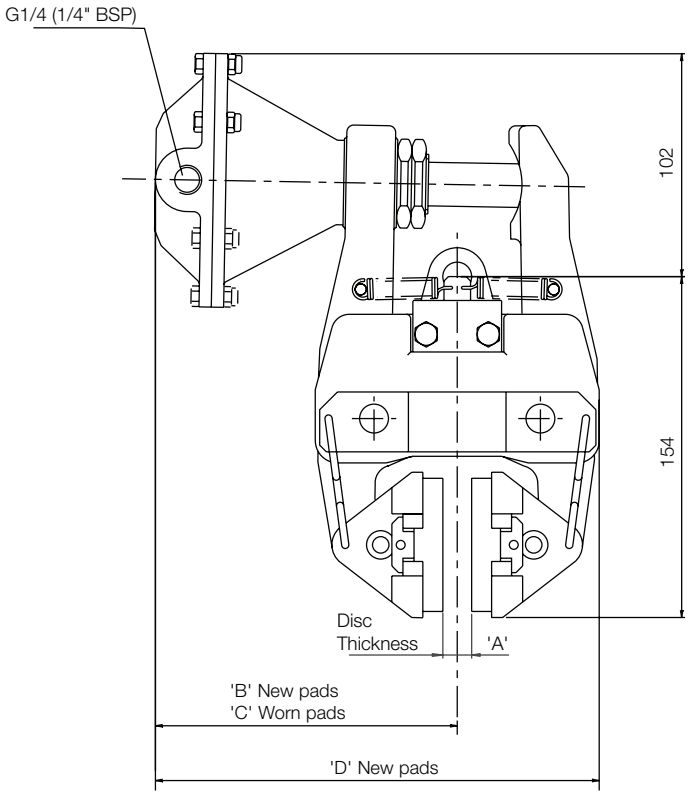

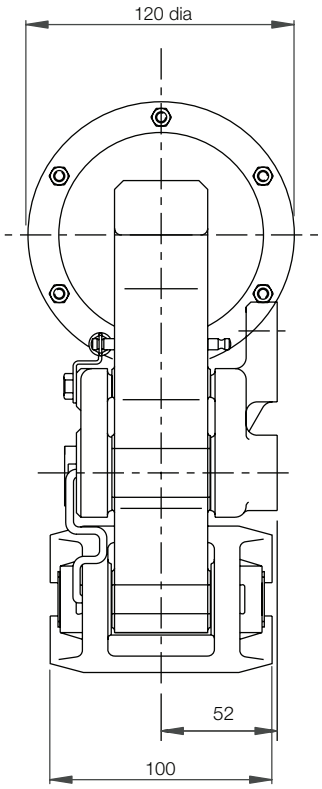

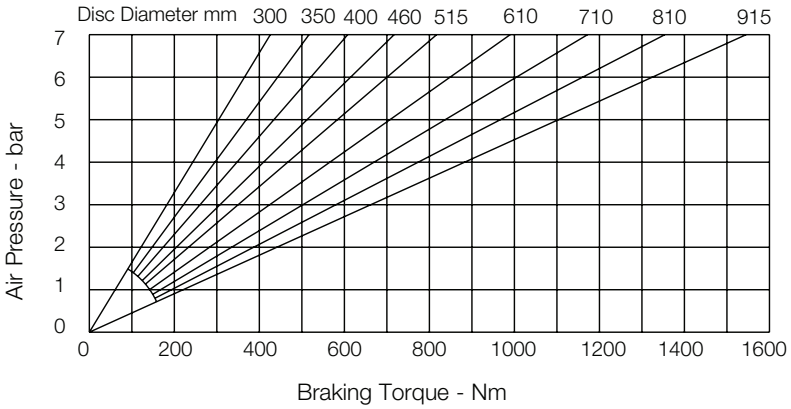

	Dimensions in mm			
Caliper	**'A'**	**'B'**	**'C'**	**'D'**
MXD 13	13	131.5	139.5	196.5
MXD 25	25	136	144	203
MXD 30	30	131.5	139.5	202.5
MXD 40	40	136	144	211

Weight (caliper and thruster) - 8.15kg
(thruster only) - 1.15kg

Volume displacement of thruster at full stroke is 150ml.

Maximum pressure 7 bar

Maximum Braking Force - 3.6kN @ 7 bar

The ratings shown on the above graph are based on fully bedded and conditioned brake pads with nominal friction coefficient μ=0.4.

For bedding-in and conditioning procedures see Publication M1060.

Braking Force is defined as the Tangential Force acting on the brake disc at the Effective Disc Radius.

Braking Torque (Nm) = Braking Force (N) x Effective Disc Radius (m) where Effective Disc Radius = Actual Disc Radius - 0.033.

Twiflex Disc Brakes must be used with Twiflex asbestos free brake pads. The use of any other brake pads will invalidate the warranty. Twiflex Limted reserves the right to modify or change the design without prior notice.

MXD Disc Brake Caliper - Pneumatically Applied, Spring Released

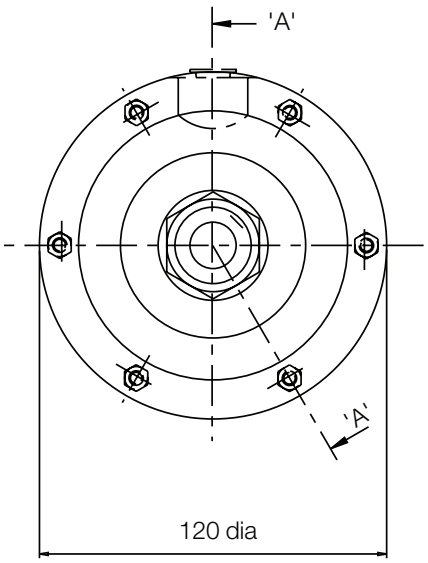

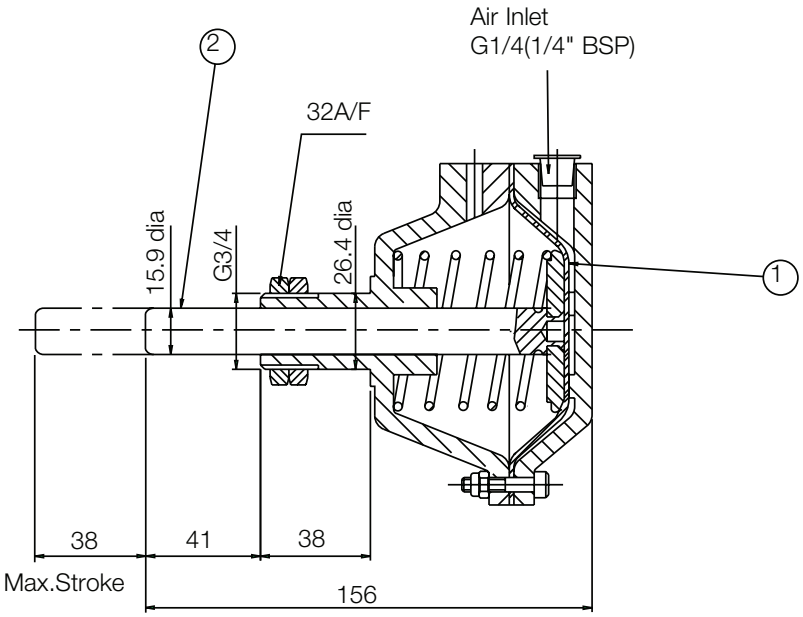

Section 'A'-'A'

This range of pneumatically operated brakes uses dry and filtered compressed air at pressures up ot 7 bar. Pneumatic brakes require a control valve which may be operated either manually, or by pneumatic or electrical signal.

Should it become necessary to replace a diaphragm, ensure air supply is disconnected, remove the M5 botls and the rear cap of the thruster. Remove the worn diaphragm; clean-up the contacting surfaces and re-assemble with the new diaphragm and botls in position. (Tightening Torque 5.7Nm)

Thruster Part Number 7200863

Available Spares		
Item	**Component**	**Part No.**
1	Diaphragm Kit	7902799
2	Piston Rod Assembly	7200802

Thruster Fitment

1. Offer thruster to caliper making sure that both lock nuts are removed before placing push rod through caliper arm.

2. Fit lock nuts over the push rod and locate it's end within the slot of the other arm.

3. Tighten one lock nut to 50-60 Nm then tighten the second nut against the first.

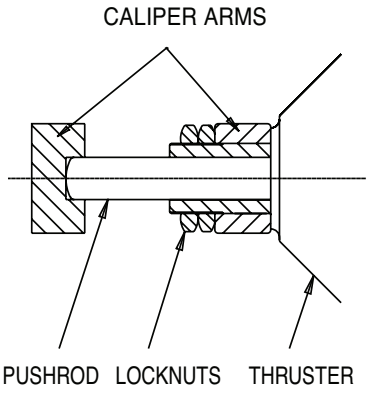

Twiflex® Limited
An Altra Industrial Motion Company

www.twiflex.com

9 Briar Road, Twickenham
Middlesex TW2 6RB - England
+44 (0) 20 8894 1161
Fax: +44 (0) 20 8755 5601

Twiflex® Limited

DS2505

MXG Disc Brake Caliper - Pneumatically Applied, Spring Released

Nominal Dimensions given

For caliper dimensions see DS2500

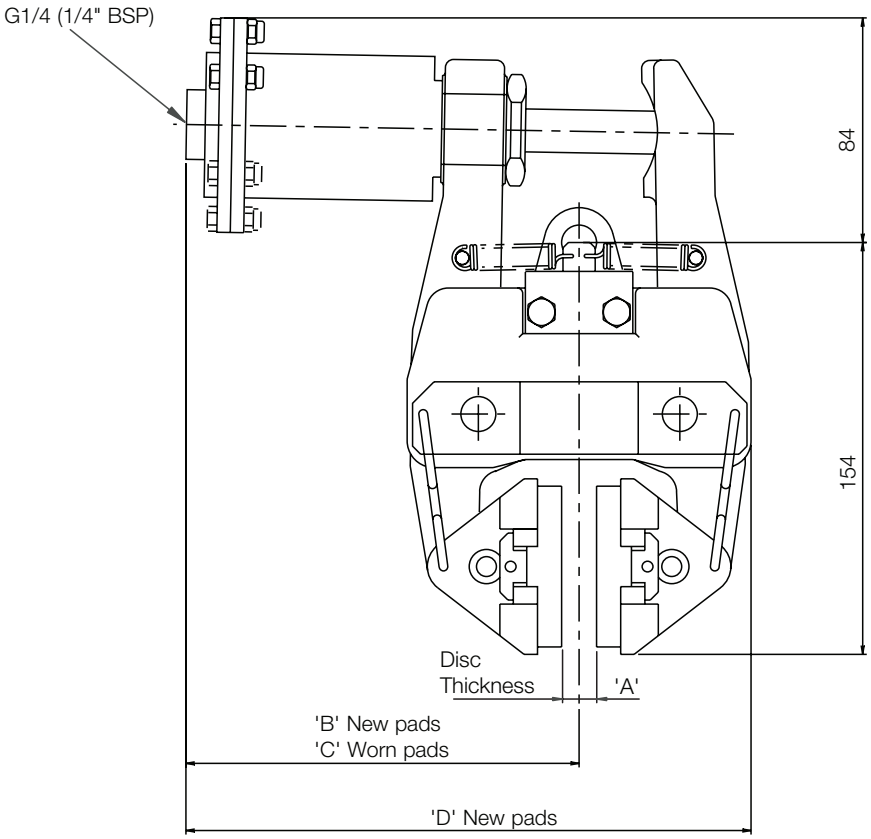

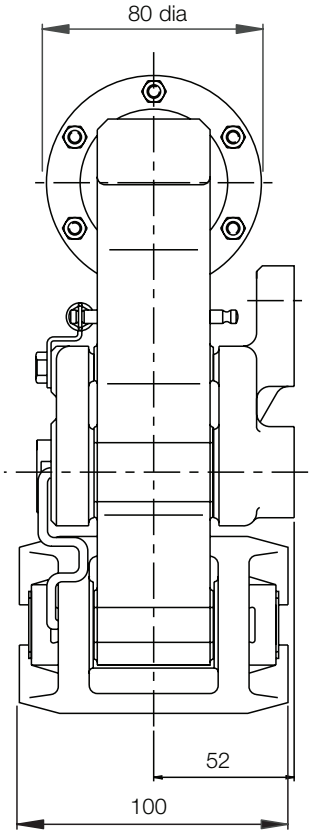

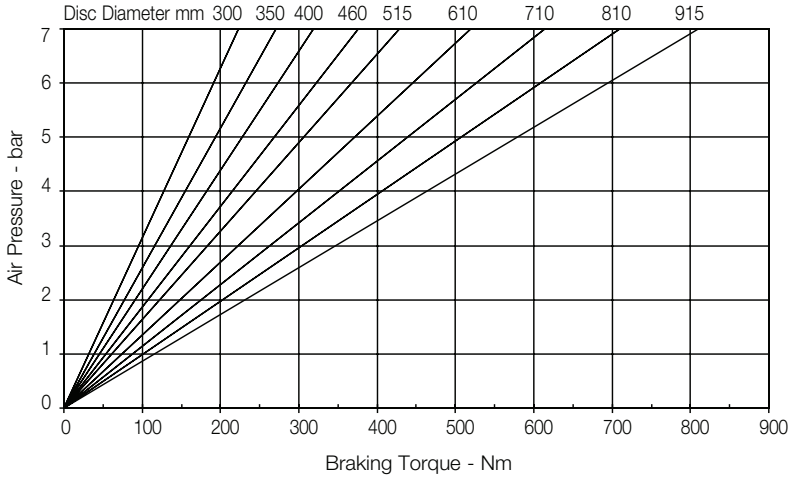

	Dimensions in mm			
Caliper	**'A'**	**'B'**	**'C'**	**'D'**
MXG 13	13	148.5	156.5	213.5
MXG 25	25	153	161	220
MXG 30	30	148.5	156.5	219.5
MXG 40	40	153	161	228

Weight (caliper and thruster) - 7.3kg
(thruster only) - 0.3kg

Volume displacement of thruster at full stroke is 64ml.

Maximum pressure 7 bar

Maximum Braking Force - 1.9kN @ 7 bar

The ratings shown on the above graph are based on fully bedded and conditioned brake pads with nominal friction coefficient μ=0.4.

For bedding-in and conditioning procedures see Publication M1060.

Braking Force is defined as the Tangential Force acting on the brake disc at the Effective Disc Radius.

Braking Torque (Nm) = Braking Force (N) x Effective Disc Radius (m) where Effective Disc Radius = Actual Disc Radius - 0.033.

Twiflex Disc Brakes must be used with Twiflex asbestos free brake pads. The use of any other brake pads will invalidate the warranty. Twiflex Limted reserves the right to modify or change the design without prior notice.

MXG Disc Brake Caliper - Pneumatically Applied, Spring Released

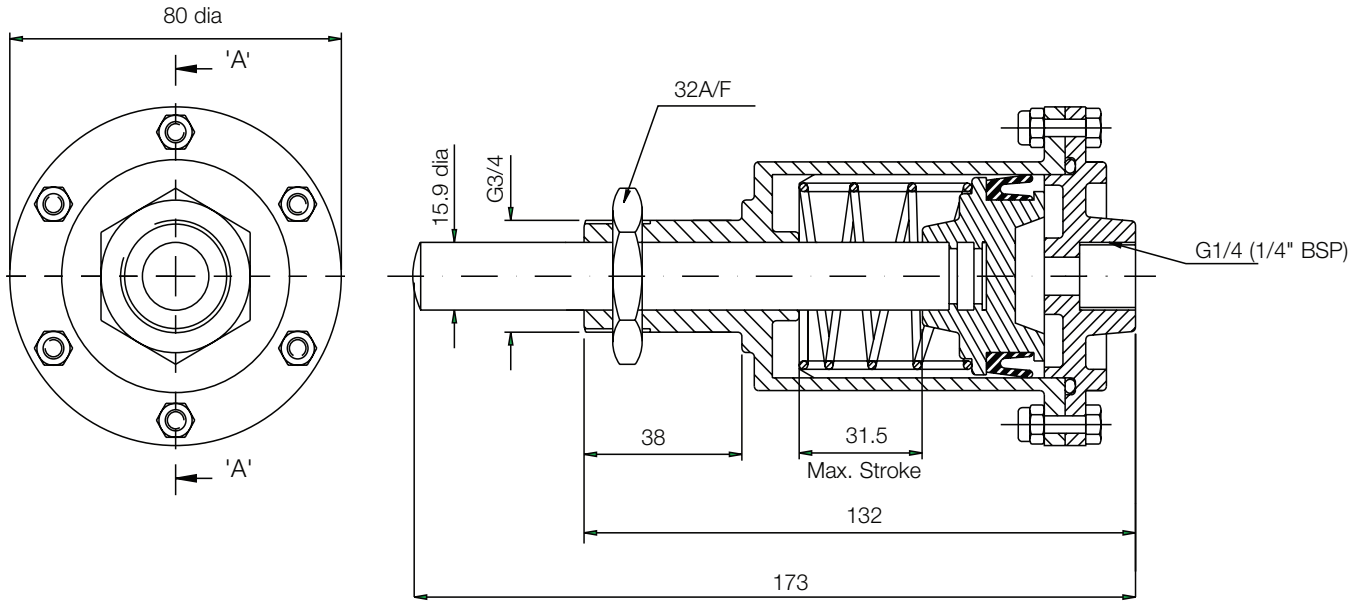

Section 'A' - 'A'

Thruster Part Number 7200434

This range of pneumatically operated brakes uses dry and filtered compressed air at pressures up ot 7 bar. Pneumatic brakes require a control valve which may be operated either manually, or by pneumatic or electrical signal.

Thruster Fitment

1. Offer thruster to caliper making sure that the lock nuts is removed before placing push rod through caliper arm.

2. Fit the lock nut over the push rod and locate it's end within the slot of the other arm.

3. Tighten the lock nut to 50-60 Nm.

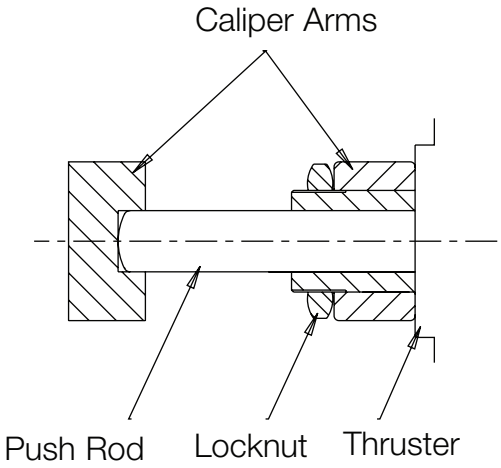

Twiflex® Limited
An Altra Industrial Motion Company

www.twiflex.com

9 Briar Road, Twickenham
Middlesex TW2 6RB - England
+44 (0) 20 8894 1161
Fax: +44 (0) 20 8755 5601